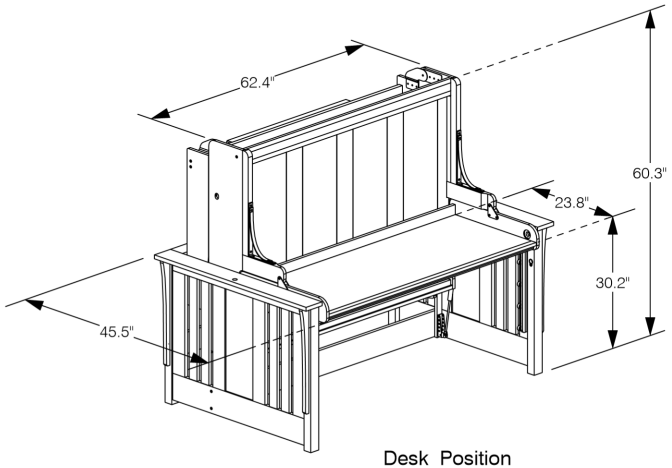

Desk Position

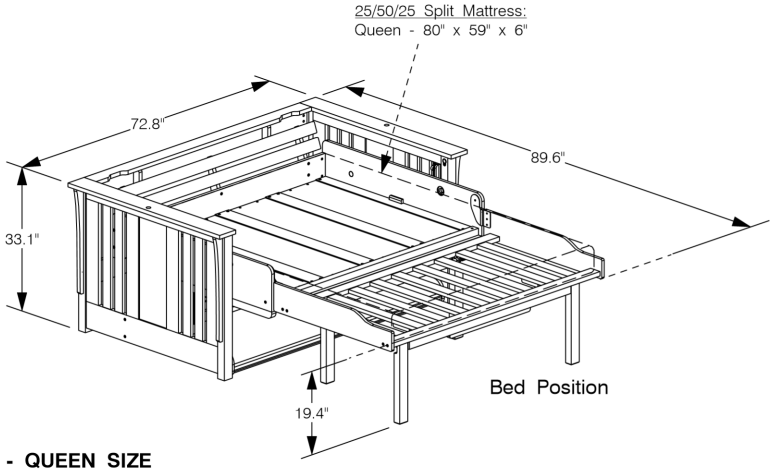

Bed Position

ARTISAN CONVERTIBLE DESK BED - QUEEN SIZE

Artisan Convertible Desk Bed (including 25/50/25 Split Mattress)

	Box H	Box W	Box L	Cubes	Net Wt.	Gr. Wt.
Arms & Bed Frame- Box 1 of 3	215mm	1290mm	1605mm	0.445m3	76.4Kg	81.4Kg
SOC-ART1-QEN-	8.5"	50.8"	63.2"	15.72cuft	168.4lb	179.5lb
Headboard, Extension, Desk & Mattress- Box 2 of 3	460mm	1070mm	1645mm	0.810m3	62.5Kg	68.8Kg
SOC-ART2-QEN-	18.1"	42.1"	64.8"	28.59cuft	137.8lb	151.7lb
Rails- Box 3 of 3	110mm	215mm	1750mm	0.041m3	10.8Kg	11.8Kg
SOC-ART3-QEN-	4.3"	8.5"	68.9"	1.46cuft	23.8lb	26.0lb

Assembled Product and Carton Dimensions*

**Please Note The Above Weights and Measures may be subject to change without notice.*